Dimensions and Mounting Holes

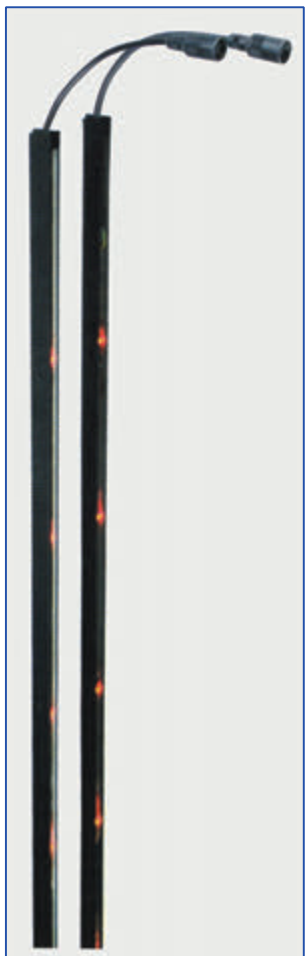

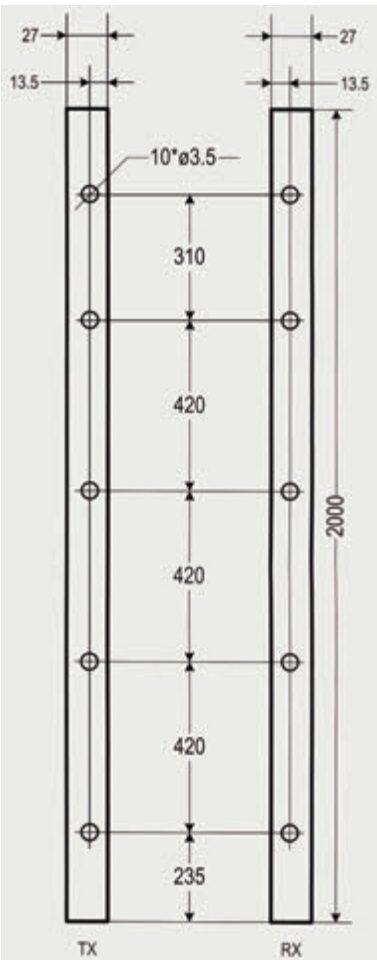

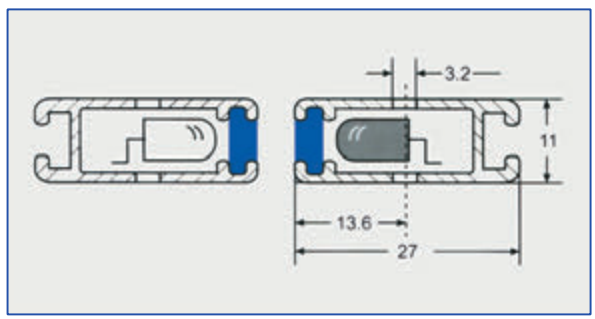

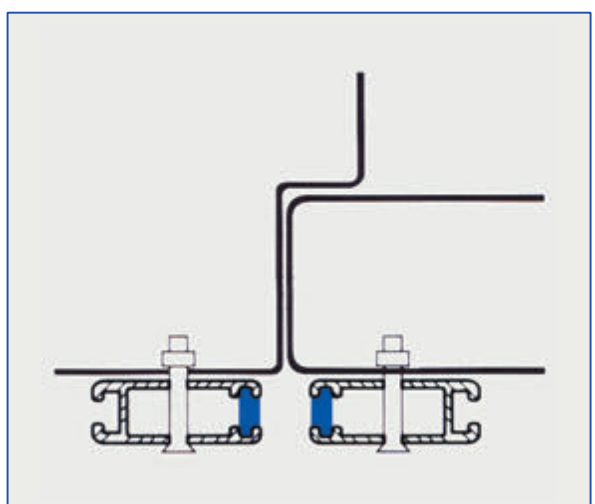

WECOMXB-Q5(N) WECOMXB-Q8(N)

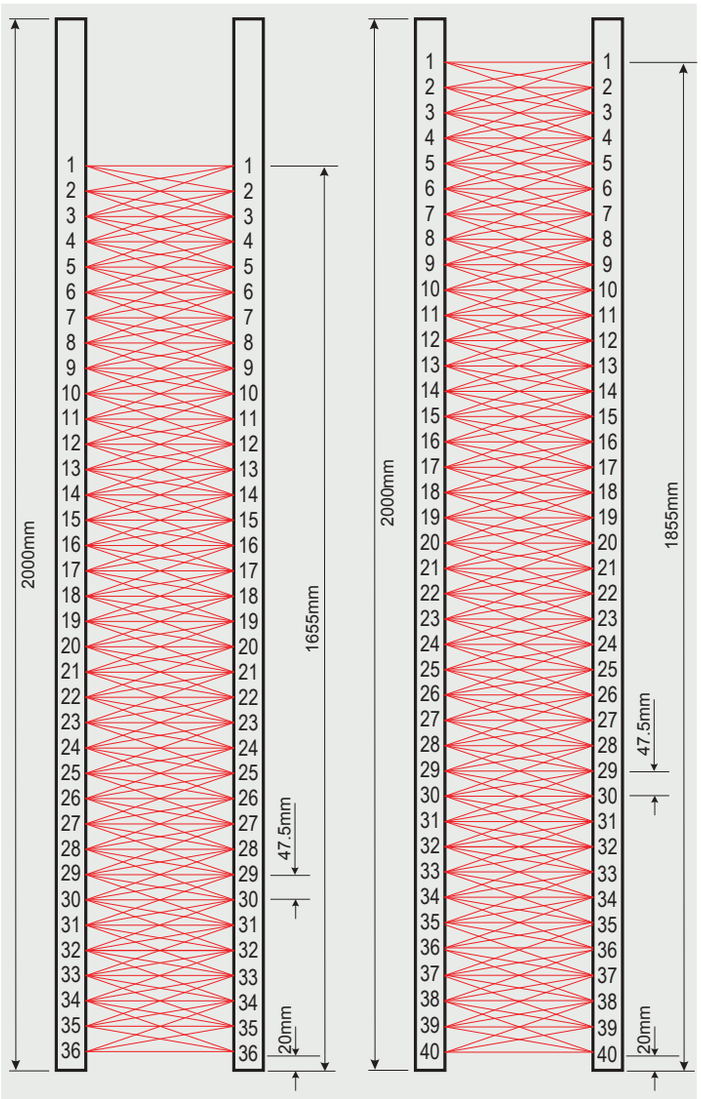

STANDARD POWER UNIT

WECOMXB-Q5, WECOMXB-Q8

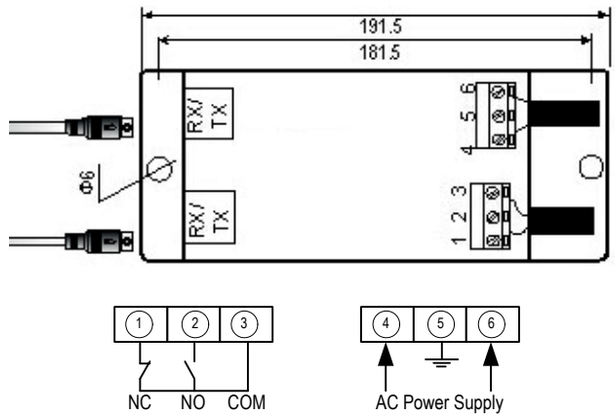

Voice Reminder (Buzzer) : 15 seconds after the obstacle warning

WITH SAFETY FUNCTION POWER UNIT

WECOMXB-Q5N, WECOMXB-Q8N

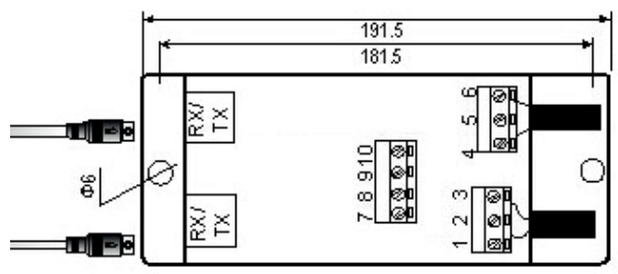

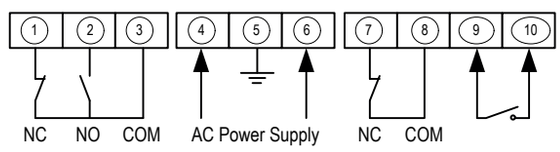

9-10 : Close signal input
7-8 : Cable fault signal output

Technical Specifications

	WECOMXB-Q5(N)	WECOMXB-Q8(N)
Number of beams	174	194
IR Diod	36	40
IR Diod range	47.5mm	
Active detec	20-1655mm.	20-1855mm.
Min.Detected object	≤ 50mm (EN 81-20)	
Detecting range	0 - 4 m	
Light Immunity	≤ 100.000 Lux	
Tolerance	Vertical: ± 15mm/7º • Horizontal: ± 3mm/5º	
Response time	≤ 65 ms	
Dimensions	2000 x 27 x 11mm	
Power consumption	≤ 4 W or100 mA / 24 VDC	
Power supply	210-230 VAC (Optional 24 VDC)	
Operating temperature	-20 ... +65 ºC	
Power indicator	Green LED	
Status indicator	Red LED	
Cables lenght (TX&RX)	3500mm	
Protection degree	IP54 (RX,TX), IP31 (Power Unit)	
EMC	EN12015, EN12016	
Marking	CE	

VOICE REMINDER (BUZZER)

SW1	Buzzer function	ON	Buzzer ON	OFF	Buzzer OFF
SW2	Buzzer delay	ON	30s after the obstacle warning	OFF	15s after the obstacle warning